TEUPEN®
...access redefined

TL44AJ

Platform Height:
44 ft 6 in (13.4 m)

Lateral Reach:
25 ft 11 in (7.9 m)

Machine Width:
2 ft 9 in (0.83 m)

Machine Height:
6 ft 6 in (1.99 m)

Machine Weight:
4,850 lbs (2,200 kg)

- Compact design, travels through a single door
- Light, low surface load for use on sensitive flooring
- Smooth, proportional electro-hydraulic controls
- Reliable and comprehensive safety control system
- Full height and outreach with 441 lbs basket load
- Automatic, self leveling outriggers
- Setup on slopes up to 21%
- Dual power for operating indoor and outdoor

TEUPEN®

PO Box 938, Pineville, NC 28134
info@teupen-usa.com
teupen-usa.com | 877-838-7361

TEUPEN®
...access redefined

TL 44AJ

Specifications

MEASUREMENTS	US	Metric
Platform height, max.	44 ft 6 in	13,40 m
Horizontal outreach, max.	25 ft 11 in	7,90 m
Up-and-over clearance, max.	17 ft 9 in	5,40 m
Platform height **(A)**	3 ft 7 in	1,10 m
Platform length **(B)**	2 ft 4 in	0,70 m
Platform width **(C)**	4 ft 8 in	1,42 m
Length, overall **(D)**	17 ft 1 in	5,20 m
Length without basket **(E)**	14 ft 9 in	4,50 m
Height, travelling position **(F)**	6 ft 6 in	1,99 m
Width, min. **(G)**	2 ft 9 in	0,79 m
Ground clearance, max. **(H)**	10 in	0,25 m
Track (L x W) **(I)**	4 ft 9 in x 8 in	145 x 20 cm
Length outrigger footprint, max. **(J)**	10 ft 10 in	3,31 m
Width outrigger footprint, max. **(K)**	9 ft 11 in	3,03 m
Outrigger plate Ø	7 in	0,18 m

PRODUCTIVITY	US	Metric
Basket capacity	441 lbs	200 kg
Movable jib	90°	90°
Turret rotation	355°	355°
Stabilization, maximum ground slope	12°/21.0 %	12°/21,0 %
Height and width track adjustment	3/6 in	8/16 cm
Gradeability, max.	19.7°/35.5 %	19,7°/35,5 %
Slope angle	16.7°/30.0 %	16,7°/30,0 %
Travel speed	1.1 mph	1,8 km/h

WEIGHT	US	Metric
Total weight	4,850 lbs	2.200 kg
Live load in travelling position	62.0 psf	3,0 kN/m²
Live load in working position	54.9 psf	2,63 kN/m²

POWER		
Standard power sources	**1) Electric:** 115 V, 19.3 A, 1.6 kW **2) Diesel:** Kubota Z 602 (10.8 kW/14.5hp) **3) Lithium Ion:** 48V / 120 Ah (Option)	
Fuel tank capacity Diesel engine	3.17 gal	12,0 l

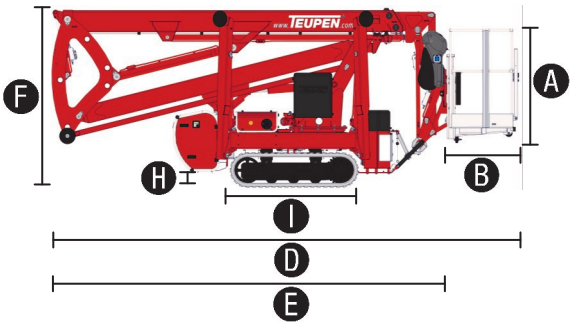

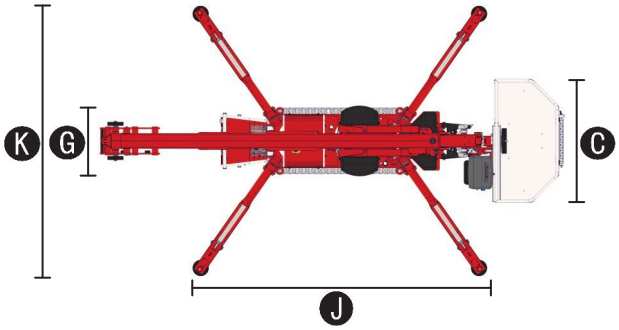

WORKING ENVELOPE

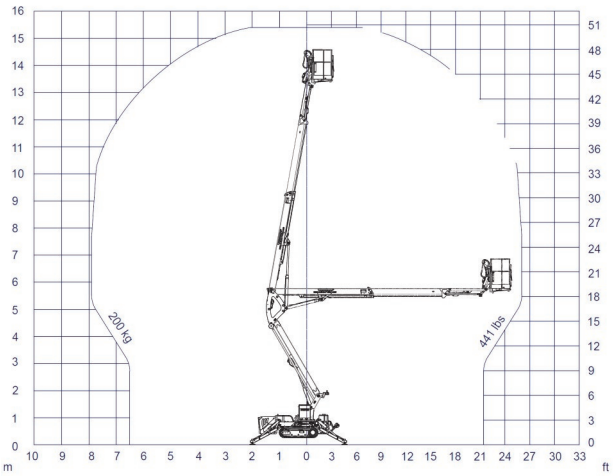

STANDARDS COMPLIANCE

EN ISO 9001

ANSI/SIA A92.5-2006 section 4 & CSA B354.1-2004 "Design & manufacture criteria"

Product specifications are subject to change without notice or obligation. Photographs and drawings in this document are for illustrative purposes only. Refer to the appropriate Operator´s Manual for instructions on the proper use of this equipment. Failure to follow the appropriate Operator´s Manual when using our equipment or to otherwise act irresponsibly may result in serious injury or death. The only warranty applicable to our equipment is the standard written warranty applicable to the particular product and sale and we make no other warranty, expressed or implied. Products and services listed may be trademarks, service marks or trade-names of Teupen Maschinenbau GmbH and/or its subsidiaries in the U.S.A. and many other countries. "Teupen", "Access redefined" and "LEO Series" are registered Trademarks of Teupen GmbH in the United States of America and many other countries. Version 2014-A © 2014 Teupen Maschinenbau GmbH.